HUBCARBON

The HC series lead-carbon batteries use activated carbon and graphene in the manufacturing process. Our advantages include long cycle life and significantly reduced battery sulfation. The battery technology improves the ability of rapid charge and discharge and greatly prolongs battery life with more than 2000 cycles at 80 % DOD. The HC series are best suited for cycling and partial state of charge (PSOC) applications.

TECHNICAL DRAWING

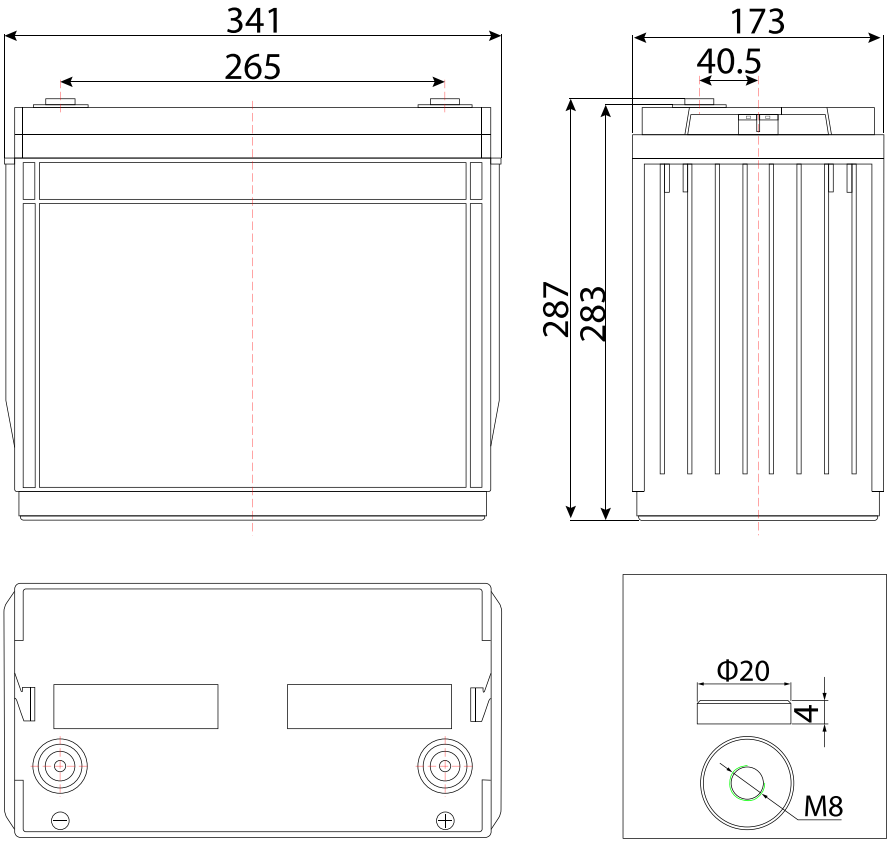

LEAD CARBON
BATTERY

HC12-140

BENEFITS AND ADVANTAGES

Start at the Core

- Able to operate at -40C to +60C
- DOD @ 50%, 3000 cycles
- Integrated design to ensure the best uniformity and reliability
- Long life and high stability in partial state of charge (PSOC)
- IEC 60896

APPLICATIONS

- Off Grid Cabins & Homes
- Marine / RV
- Hybrid Solar & Grid Tie
- Wheel Chairs, Golf Carts
- Telecom Systems
- Off-Grid Industrial
- Micro Grid Systems

www.hubpower.ca
4238 Lozells Ave #114 Burnaby, BC V5A 0C4

Phone: (604) 420-7737
Email: sales@hubpower.ca

ELECTRICAL SPECIFICATIONS

Nominal Voltage	12V
Amp Hour Capacity C 20	140AH
Amp Hour Capacity C 48	143.36
Amp Hour Capacity C 72	146.72
Amp Hour Capacity C 100	150.08
Amp Hour Capacity C 120	153.73
Amp Hour Capacity C 240	157.40

TEMPERATURE SPECIFICATIONS

Cold temperature applications	
Discharge Temperature	(-40C)
Charge Temperature	(-40C)
Storage	-40C to 45C

CHARGE SPECIFICATIONS

Recommend Charge current	14A
Max Charge current	28A
Bulk Charge V	14.6
Absorption V	14.6
Float V	13.7
Equalization V ≤ 22A	14.9

DISCHARGE SPECIFICATIONS

Current Discharge Rates	
20 hour rate	7A
10 hour rate	13A
5 hour rate	24A
1 hour rate	90A

MECHANICAL SPECIFICATIONS

Dimensions L x W x H	13.42 x 6.8 x 11.14in 341 x 173 x 283mm
Weight	89.3 lbs (40.5KG)
Terminal Type	M8
Terminal Torque	90 in lbs (10NM)
Case Material	ABS
Case IP Rating	IP56
Cell Type - Chemistry	Lead Carbon VRLA
Cell Type	Flat Plate

SAFETY TESTED

Safety Ratings	IEC60896 CE UL

PERFORMANCE CHARACTERISTICS

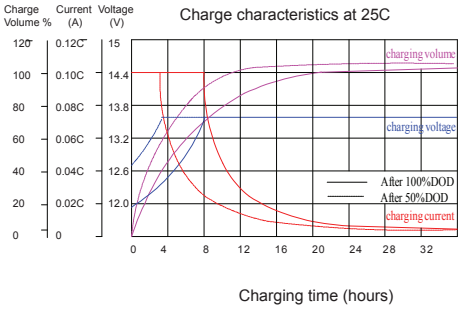

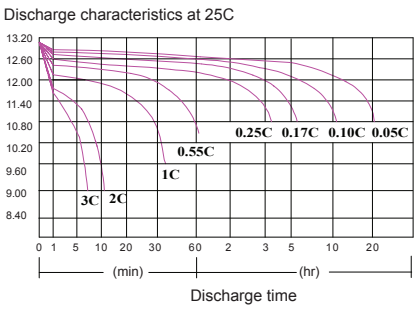

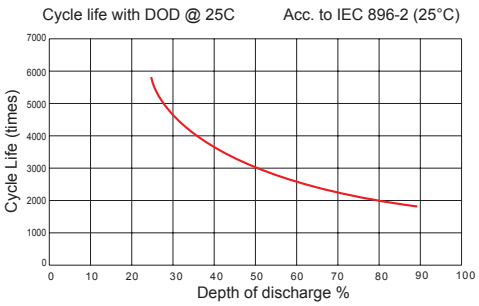

www.hubpower.ca
4238 Lozells Ave #114 Burnaby, BC V5A 0C4